VESA Wall Mount Arm (Black)

PAD-WMAB

INSTALLATION - MANUAL

CONTENTS:

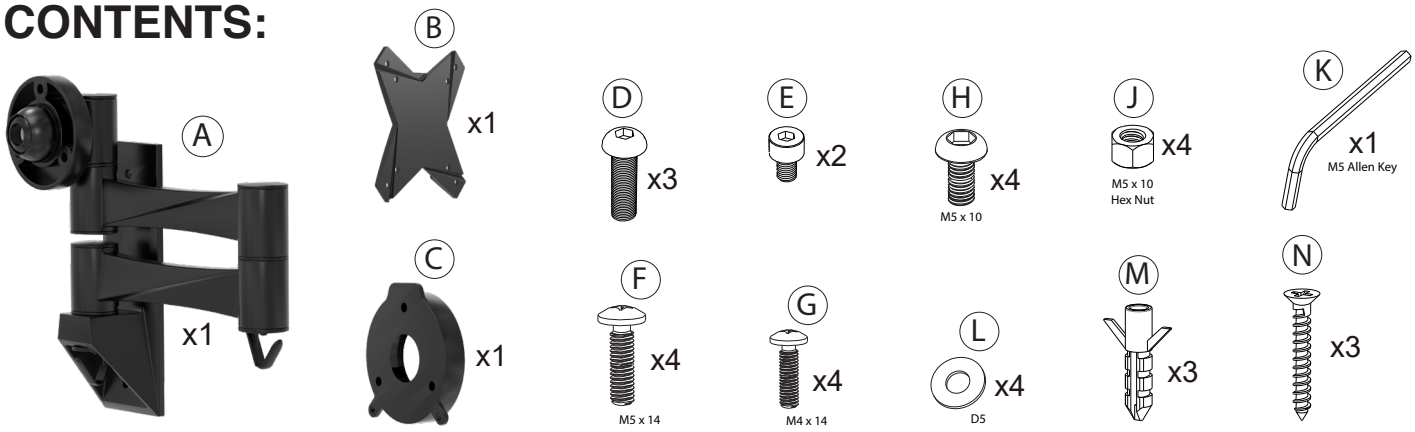

INSTALLATION:

1. Assembling VESA Plate:

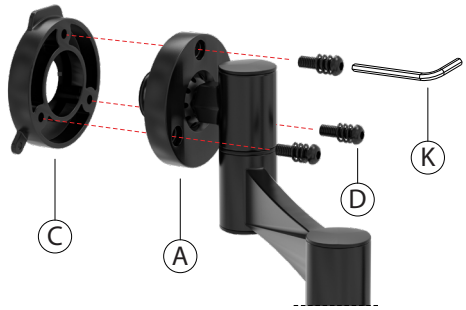

1A. Align component (C) and (A) holes, and rotate in screws (D) as shown above using provided allen key tool (K) until securely tightened.

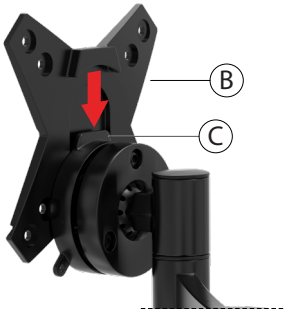

1B. Slide down the VESA plate (B) until attached to component (C).

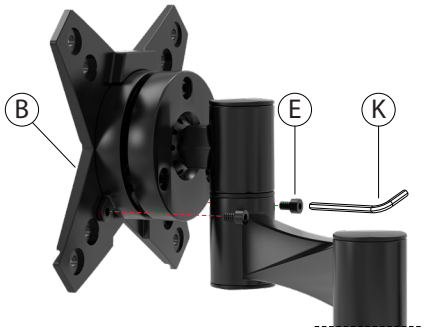

1C. Rotate in screws (E) as shown above using provided allen key tool (K) until securely tightened.

2. Attaching to Wall:

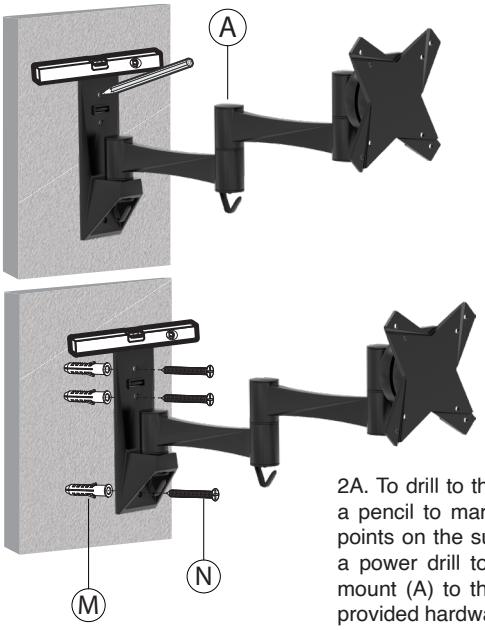

2A. To drill to the wall, use a pencil to mark your aim points on the surface. Use a power drill to install the mount (A) to the wall with provided hardware (screws and anchors).

Attaching to Enclosure

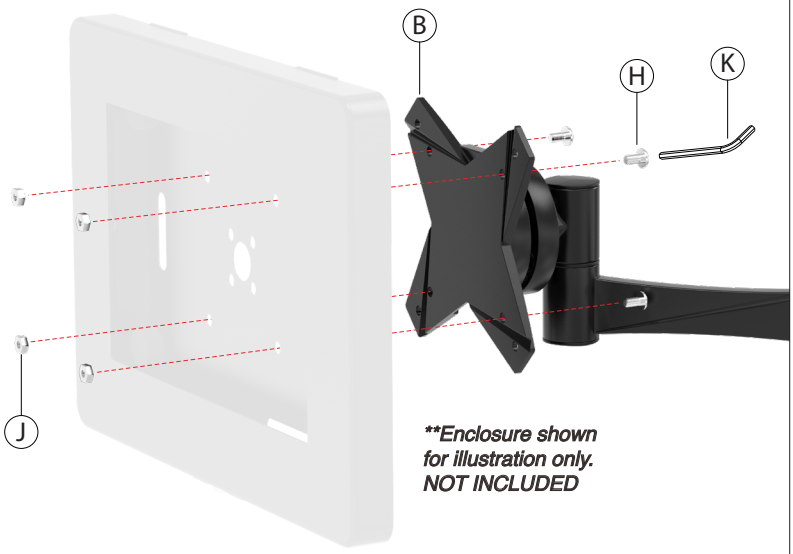

***Enclosure shown for illustration only. NOT INCLUDED*

To attach VESA enclosure, insert screws (H) through the back of the mounting VESA plate (B) while holding the nuts (J) from the front, then rotate using included allen key tool (K) until securely tightened.

36 Taaffe Place Brooklyn, NY 11205 support@ctadigital.com (718) 963–9845 www.ctadigital.com

Attaching to VESA Ready Device

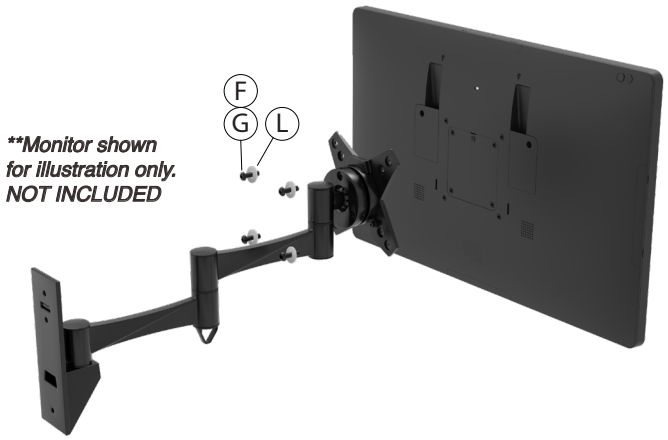

To attach VESA compatible device with threads, insert screws (F or G) and washers (L) through the back of the mounting plate and into the device to achieve a secure and sturdy placements.

Cable Management

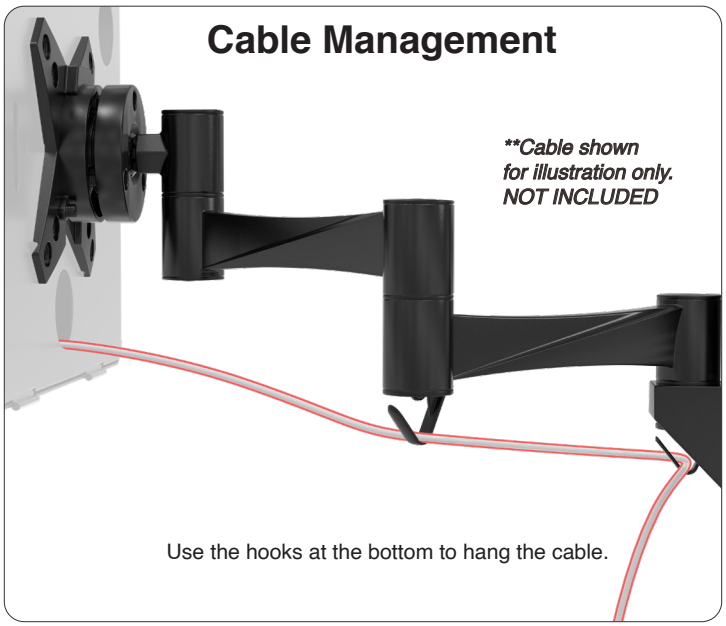

Use the hooks at the bottom to hang the cable.

Wall Mount Adjustability

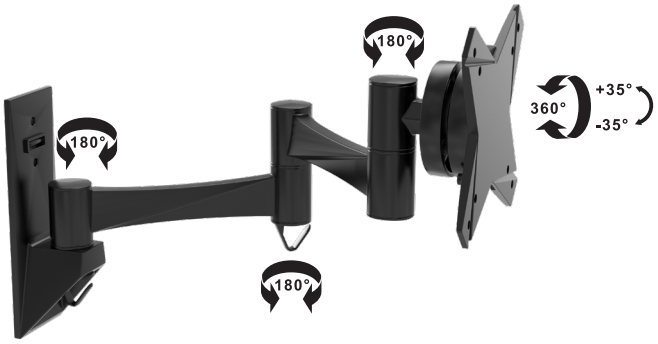

Caution

Please be sure to fasten all the screws securely before using. Failure to do so may compromise integrity.

36 Taaffe Place Brooklyn, NY 11205 support@ctadigital.com (718) 963–9845 www.ctadigital.com